Fronzen Dice

# SL 35 R290 NTC

**Self-contained ice maker - Sprayer system**
**Daily production** up to 22 **kg**

| | | | | | | | | |
|---|---|---|---|---|---|---|---|---|
| Hotel | ● | ● | ● | ● | ● | ● | ● | ○ |
| Restaurant | ● | ● | ● | ● | ● | ● | ○ | ○ |
| Fast food | ● | ● | ● | ○ | ○ | ○ | ○ | ○ |
| Bar | ● | ● | ● | ● | ● | ● | ● | ● |
| Disco | ● | ● | ● | ● | ● | ● | ● | ● |
| Fish markets | ○ | ○ | ○ | ○ | ○ | ○ | ○ | ○ |
| Supermarkets | ○ | ○ | ○ | ○ | ○ | ○ | ○ | ○ |
| Medical & SPA | ● | ● | ○ | ○ | ○ | ○ | ○ | ○ |
| Industry | ● | ○ | ○ | ○ | ○ | ○ | ○ | ○ |




## ▶ Features & Plus

- Full cube, compact and crystalline
- Extrernal structure AISI 304 Scotch Brite
- Electromechanical functionning
- Air Cooling and Water Cooling  systems
- Standard and special voltages
- Insulated retractable door
- ON-OFF switch
- Cleanable antiscale filter
- Internal bin insulation HCFC free
- Conformity to RoHS directive
- Easy cleaning thanks to rounded surfaces
- Model in Tropical Class + 43 ° C
- Undercounter model

**2 Years Warranty** subject to limitations

## ▶ Certifications available for this model


www.ntfice.it
info@bremaicegroup.it


We are Brema Group

Frozen Dice

# SL 35 R290 NTC

**Self-contained ice maker - Sprayer system**
**Daily production** up to 22 **kg**

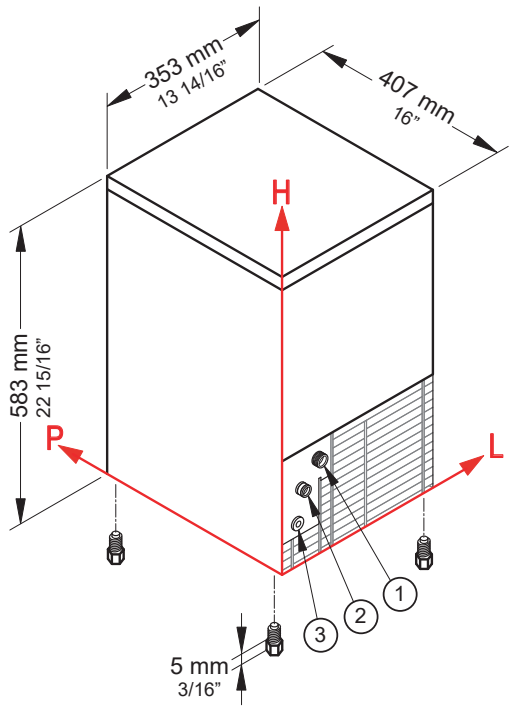


## Working conditions

• Location: **Indoor**

| | Min | Max |
|---|---|---|
| Ambient temperature | +10° C / +50° F | +43° C / 110° F |
| Water temperature | +3° C / +37° F | +32° C / +90° F |
| Voltage | -10% | +10% |
| Water inlet pressure | 1bar (14 psi) | 6bar (84 psi) |

## ▶ Available ice cube size

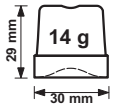


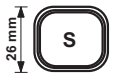


## ▶ Performances

| Air temperature | Water temperature 7° C | 45° F | 15° C | 60° F | 21° C | 70° F |
|---|---|---|---|---|---|---|
| 10° C | 22 kg | | | | | |
| 50° F | | 49 lbs | | | | |
| 21° C | | | 20 kg | | | |
| 70° F | | | | 44 lbs | | |
| 32° C | | | | | 16 kg | |
| 90° F | | | | | | 35 lbs |

## ▶ Connections standard version

① Water in.: 88mm / 3 7/16" - 184mm / 7 4/16" - 3/4"
② Water out.: 45mm / 1 12/16" - 138mm / 5 7/16" - 24mm / 15/16"
③ Electrical connections: 41mm / 1 10/16" - 73mm/ 2 14/16"

All measures are referred to the rear bottom-left corner (L-H-Ø)

## ▶ Technical information

| | |
|---|---|
| Production in 24h | 20 kg / 44 lbs |
| Store capacity, up to | 4 kg / 9 lbs |
| Cooling system | A - W |
| Kind of cube | 14 g |
| Refrigerant | R290 |
| Standard voltage | 220-240 V ~ 50 Hz |
| Average power consumption | 260 W |
| Fuse | 10 A |
| Electrical consumption | 35 kWh/100kg |

| | |
|---|---|
| Water consumption | A: 4 l/kg - 47,9 gal/100 lbs |
| | W: 27 l/kg - 323,5 gal/100 lbs |
| Sizes (L-P-H mm) | 353 - 407 - 583 |
| (L-P-H in) | 13 14/16 - 16 - 22 15/16 |
| Sizes with pack (L-P-H mm) | 415 - 445 - 780 |
| (L-P-H in) | 16 5/16 - 17 8/16 - 30 11/16 |
| Net weight | 27,5 kg / 61 lbs |
| Gross weight | 34 kg / 75 lbs |
| Finish | Stainless steel 18/8, scotch brite |

All the technical information must be considered at the following conditions:
Sizes without feet
Standard Cube (14 g)
Ambient temperature +21° C
Water temperature +15° C
Electrical consumption at +32° C (standard voltage)
Average power consumption at +43° C (standard voltage)

**Models and specifications are subject to change without notice**

Rev. 00 - Issued February 2026

www.ntfice.it
info@bremaicegroup.it

We are NTF